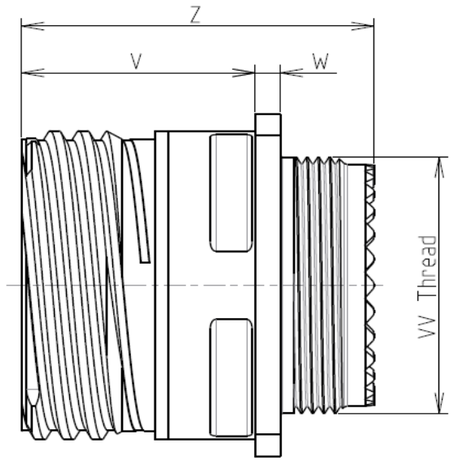

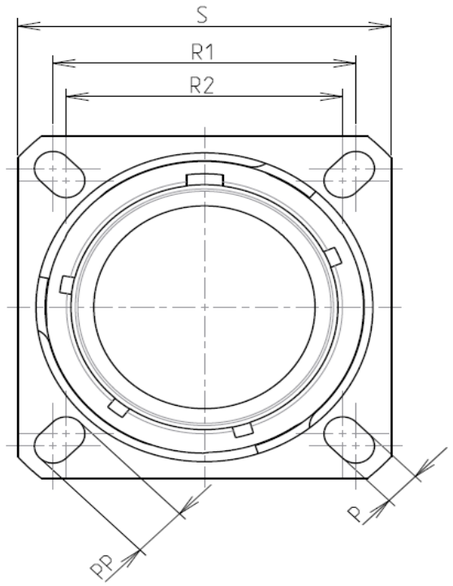

Keying Shown as example

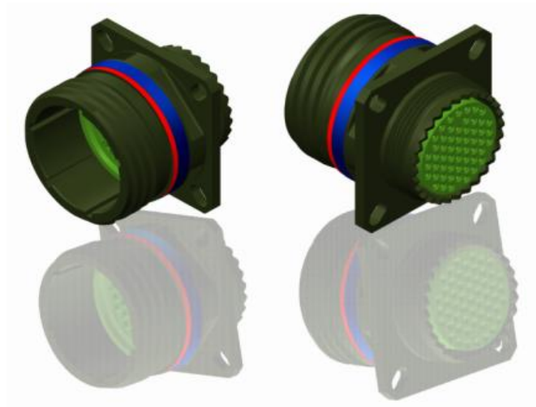

LAYOUT SHOWN AS EXAMPLE

CHARACTERISTICS

-Standard : Based on MIL-DTL-38999 Series III
-Shell Material : Aluminium
-Shell Plating : Black Zinc Nickel
-Insulator : Thermoplastic
-Contacts : Copper Alloy
-Seals & Grommet : Silicon Elastomer
-Contact Plating : Gold over copper Alloy 0.8µm minimum
-Durability : 500 Mating cycles
-Delivered with Souriau contacts and Accessories

-Temperature Range : -65°C to +175°C
-Salt Spray : 500 hours
-Mass : 36.69 g ± 10%

Connector dimension	
Dim	**Nominal**
P	3.25±0.2
PP	4.93±0.2
R1	31.75
R2	29.36
S	39.7±0.3
V	20.07+0/-1.25
W	2.1/3.2
Z	31.5 Max
VV THREAD	M31x1-6g

SOURIAU shall not be liable for any non-conformity or damage due to a use of the Products which does not comply with the Specifications issued by either of the Parties or by a third party (professional recommendation, technical notice.)

Country	Jurisdiction & Control List
FR	Not Listed

PN: 8D021Z35AD

ISS	DATE	Latest modification - by	MOD N°
A	02-11-2016	First Release	

Designed By: Date: **CUSTOMER DRAWING**

TITLE Aluminium Receptacle 8D series

SCALE NA | General linear Tolerances: ±-- | NPRDS / PROJECT **859**

SOURIAU WWW.SOURIAU.COM

This document is the property of SOURIAU it must not be reproduced or communicated without permission

FORMAT A3 | SOURIAU DRG N° 8D021Z35AD-C | SHEET 1/2

BASIC SERIES:	8D	0	-	21	Z	35	A	D

SHELL TYPE : Square Flange Receptacle
CONTACT TYPE : Standard Crimp Contact
SHELL SIZE : 21
PLATING : Z = Black Zinc Nickel

ORIENTATION : D
CONTACT TYPE : PIN(500 Matings)
CONTACT LAYOUT : 21-35

Contact Layout

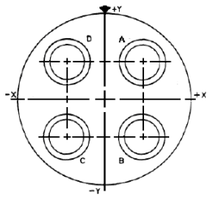

(Inactive for new design for MIL-DTL-38999. For new design, use arrangement no. 21-76.)

Contacts (Insert arrangement 21-75)		
Contact position ID	Location	
	X axis	Y axis
A	+.180 (4.57)	+.180 (4.57)
B	+.180 (4.57)	-.180 (4.57)
C	-.180 (4.57)	-.180 (4.57)
D	-.180 (4.57)	+.180 (4.57)

Shell size	Arrangement no.	Number of contacts	Size contacts	Service rating	Contact location	Standard contact	
						Pin	Socket
21	-75	4	8 (see note)	Twinax	All	M39029/90-529	M39029/91-530

Panel Cutout

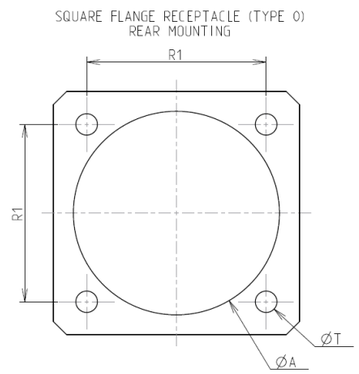

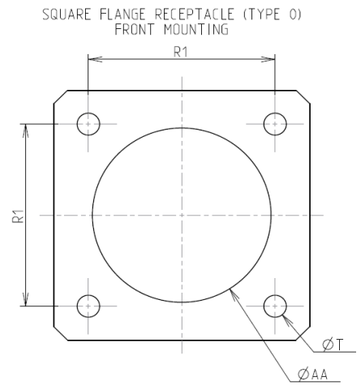

Dim	Nominal
ØA	36.12 min
ØAA	32.16 min
R1	31.75
ØT	3.25 ±0.13

SOURIAU shall not be liable for any non-conformity or damage due to a use of the Products which does not comply with the Specifications issued by either of the Parties or by a third party (professional recommendation, technical notice.)

Country	Jurisdiction & Control List
FR	Not Listed

PN: 8D021Z35AD

ISS	DATE	Latest modification - by	MOD N°
A	02-11-2016	First Release	

Designed By: Date: **CUSTOMER DRAWING**

TITLE Aluminium Receptacle 8D series

SCALE NA

General linear Tolerances: ±--

NPRDS / PROJECT **859**

SOURIAU WWW.SOURIAU.COM

This document is the property of SOURIAU it must not be reproduced or communicated without permission

FORMAT A3

SOURIAU DRG N° 8D021Z35AD-C

SHEET 2/2